Chapter 3: Framing

Special Materials May Be Needed

[V401.1] **Structural Panels With Low Formaldehyde Ratings.** Sheathing or panels (plywood, waferboard, strandboard, etc.) within the conditioned space of the building must be marked with one of the following grade stamps:

- Exposure 1
- Exterior Grade
- HUD-Approved

These stamps indicate the material will release relatively small amounts of formaldehyde.

Eliminating formaldehyde-bearing products from the home is an example of "source control" – keeping indoor air pollutant sources out of the home.

Intermediate Framing Materials. In Zone 2, several prescriptive options require intermediate wall framing. Credit for the added thermal efficiency gained by advanced framing is also allowed if a project follows the component performance or systems analysis approach. To meet the requirements of intermediate wall framing, installation of foam insulation for headers is required (see Figure 3-14).

Advanced Framing Materials. If you're planning to do advanced wall framing, be sure to order sheathing, siding, and wallboard rated for a 24-inch on-center framing.

The Washington State Energy Code (WSEC) does not require advanced framing for walls, but will credit the added thermal efficiency gained by advanced framing if your project follows a component performance or systems analysis approach (see pages 1-7 and 1-11).

Special Trusses. The WSEC requires "advanced" roof/ceiling framing for some prescriptive paths, and will credit the added thermal efficiency gained by advanced framing if your project follows the component performance or systems analysis approach.

Windows. Before you order or install windows, make sure the windows meet Code requirements (see Chapter 1).

Heat loss through windows, per square foot, is very high compared to most other building envelope components. Decisions about window type, glazing area, and orientation can be the most important energy performance choices you make for the home.

U-Factors are a measure of window energy performance. The lower the U-factor, the lower the rate of heat transfer, and the better the energy performance of the window. The total window area and the area weighted U-factor (see page 1-4) for all windows must meet the compliance path chosen. Always check with your building jurisdiction before adding additional windows or changing window type. Unapproved changes may result in unnecessary construction delays while compliance is reverified.

All windows and skylights should be tested to establish U-factors. Only National Fenestration Rating Council (NFRC) Standard 100-2004 test results from a certified laboratory will be acceptable. NFRC Residential Model Size must be used. If a test result is not available, you must use the appropriate default U-factor listed in the Code for Compliance (see WSEC Table 10-6A and Table 10-6B).

Solar heat gain coefficient (SHGC) will also be needed if a Systems Analysis Approach is being utilized.

For more information on NFRC labeling, visit the Efficient Windows Collaborative web site.
www.efficientwindows.org/nfrc.html

Note: The Code considers sliding glass doors as windows.

Some windows may require special jamb extensions because of added wall thickness needed to accommodate required insulation levels.

Some homes may use ventilation slots built into the window frame to meet air inlet requirements of the VIAQ Code. Check the type of ventilation system being used in

the house before ordering windows (see Chapter 8).

Exterior Doors. The following doors must meet the chosen compliance path required U-factor for exterior doors:

- Entry doors.
- Garage passage doors.
- Interior doors to unheated basements.
- Doors joining any heated space with an unheated space.
- One swinging door of not more than 24 square feet may be exempted from the door U-factor requirement. [502.1.5.2, Exception 3]

If a tested value for the door assembly you plan to use is not available, then use the default values in WSEC Table 10-6C.

> **Note:** The area of glazing that is part of any swinging door is included in the total glazing area of the house as determined for prescriptive compliance. The U-factor of this door glazing, however, is counted as part of the doors overall U-factor (see WSEC Table 10-6D).

Skylights. Skylights are included in the total glazing percentage for the home. Skylights must meet U-factor requirements specific to overhead glazing. Default U-factors for overhead glazing are listed in WSEC Table 10-6E.

Walls

Intermediate and Advanced Framing. In Climate Zone 2, several prescriptive options require intermediate wall framing. Credit for the added thermal efficiency gained by intermediate framing is also allowed if a project follows the component performance or systems analysis approach. The requirements of intermediate wall framing include:

- Two stud corners instead of three (see Figure 3-12);
- Partition wall intersections with exterior are framed to accommodate insulation of the exterior wall (see Figure 3-13);

- All headers must be insulated to R-5 or better (see figure 3-14).

The reduced wood surface area and increased insulation area in advanced framing will improve thermal performance. If component performance or systems analysis compliance paths are used, this improved performance will help qualify the house.

Advanced framing is different from standard framing (see Figure 3-1). It is defined within the Code as:

- Studs on 24-inch centers.
- Headers insulated with R-10 material (wherever structurally possible).
- Headers supported without cripples.
- Fully insulated corners.
- Interior/exterior wall intersection fully insulated.
- Double top plate is allowed.

[502.1.4.6] In either case, all wall cavities must be filled with insulation, including cavities isolated during framing.

Standard, Intermediate, and Advanced Framing

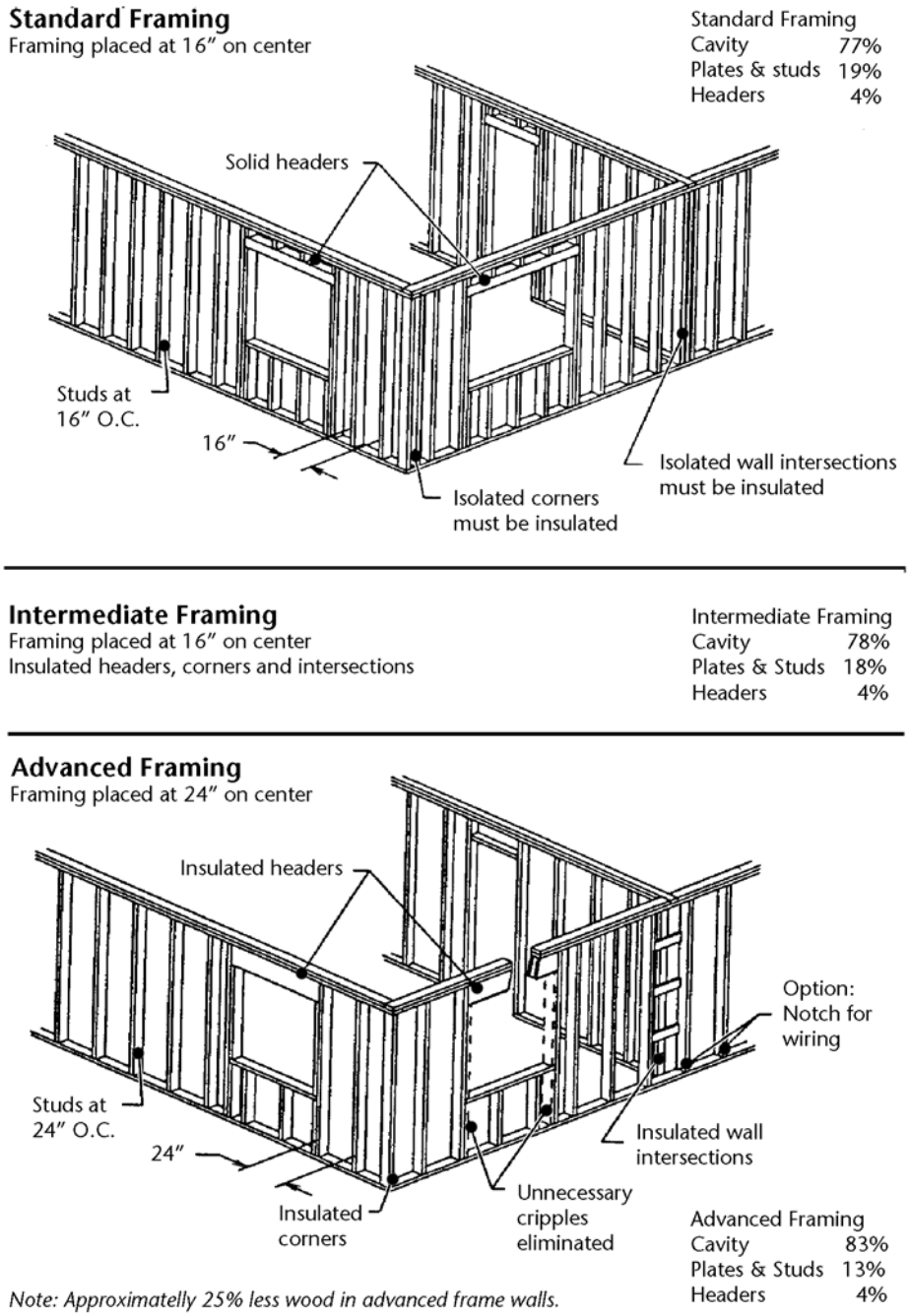

Figure 3-1

Energy-Efficient Floor Framing

Framed floors over unconditioned space must be able to accommodate the levels of insulation required (see Chapter 4 for insulation details).

[502.4.3] **Sealing Air Leaks.** The WSEC requires that all openings, joints, and penetrations in the thermal envelope of the building must be sealed, caulked, gasketed, or weather-stripped to limit air leakage.

The first floor rim joist area over a basement and the rim joist area between floors may require special attention during framing (see Figures 3-2, 3-3 and Chapter 5, Air Leakage and Moisture Control).

[502.1.6.2] **Vapor Retarders.** Floors over unconditioned space must include a vapor retarder. Manufactured flooring materials (plywood, etc.) with exterior grade glues meet this requirement. Flooring systems such as 2x6 decking that don't include plywood or similar materials must use kraft paper, poly sheathing, or some other rated material as a vapor retarder (see Figure 3-4).

Basement Rim Air Barrier

[502.4.3]

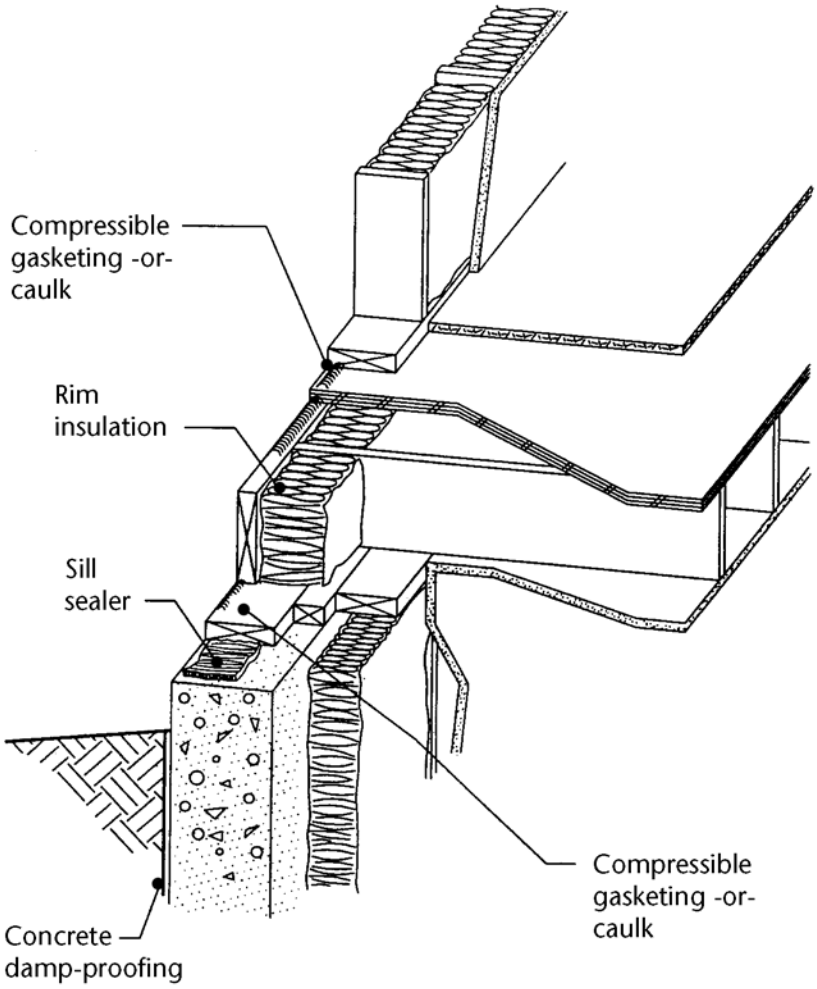

Figure 3-2

Standard Rim Air Barrier

[502.4.3]

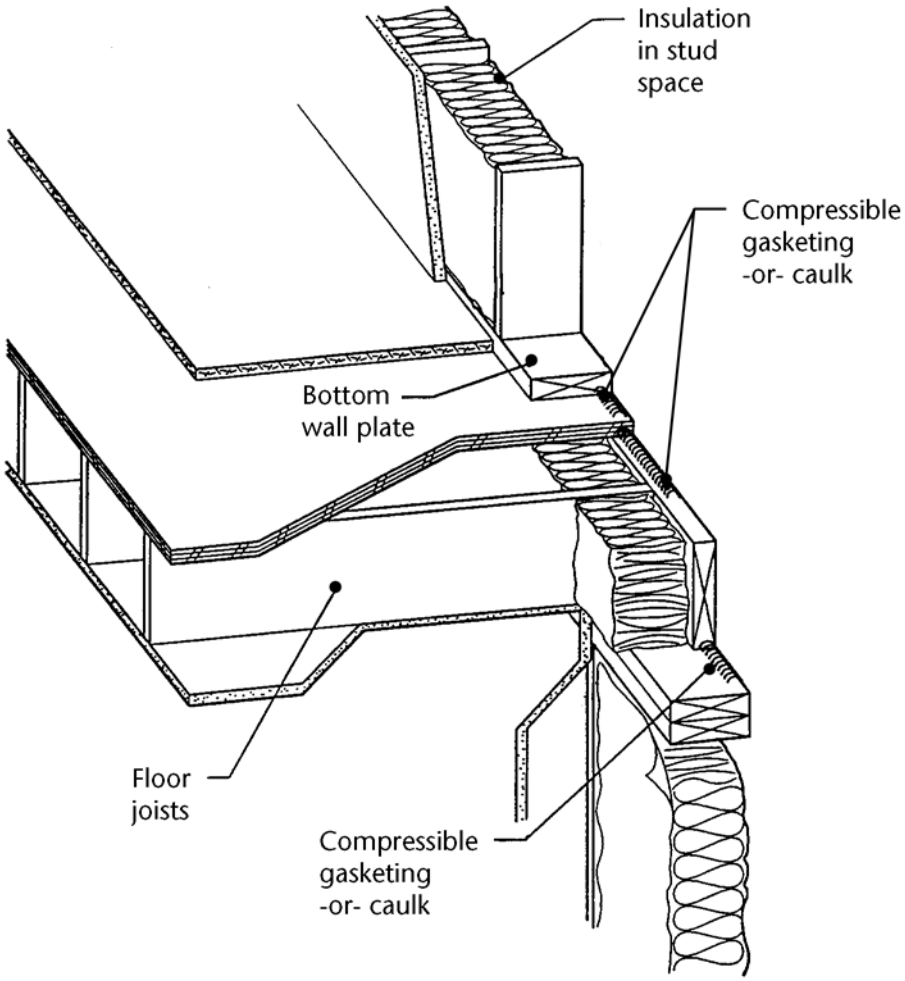

Figure 3-3

Post and Beam Air Sealing

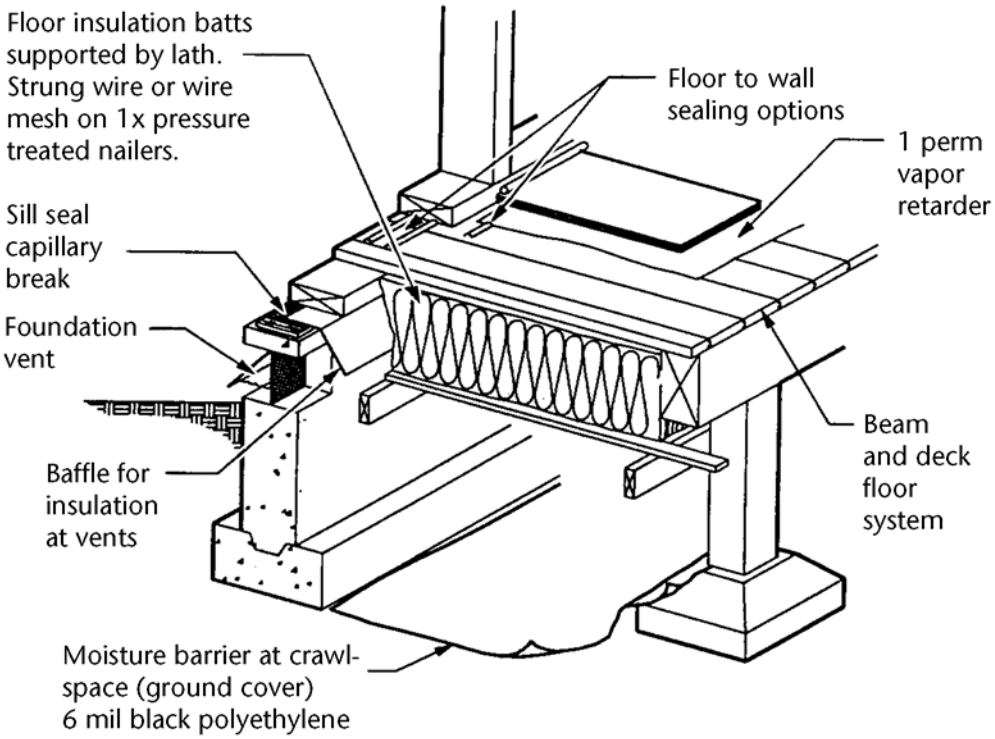

Figure 3-4

Energy-Efficient Wall Framing

You may use any wall detail that has an insulation nominal R-value equal to or exceeding your chosen compliance path (see Figure 3-5 and Chapter 1).

[502.1.4.6] **Wall Details.** The prescriptive approach identifies two alternatives as equivalent to the nominal R-21 wall (see Figure 3-6). In addition, the component performance and systems analysis approaches credit the use of higher R-value walls (see Figure 3-7). The use of double framed walls or stressed-skin panels are among other options that may work (see Figure 3-8).

Insulated Sheathing. Insulated sheathing may be used to increase the R-value of a wall. Insulated sheathing is required in Prescriptive Path V in Table 6-2. If the insulated sheathing is used in place of structural sheathing, additional wall bracing will be required. Consult the *International Residential Code* for bracing requirements in your area.

Rigid foam insulation may be applied to either the interior or exterior surface of the exterior wall (see Figures 3-9, 3-10 and 3-11). Applying foam to the exterior is the preferred option.

Additional references, prepared by the APA Engineered Wood Association, may also be useful. Check the various resources available on the APA website: ***www.apawood.org***

Insulation. Code requires all cavities in the thermal envelope of the building be filled with insulation. Corners and wall intersection can easily be filled during the normal placement of wall insulation using certain details (see Figures 3-12 and 3-13). These details, while not required by Code, help prevent creating isolated areas during framing.

Headers. Headers must always be properly sized to meet loading conditions. Any remaining wall cavity space adjacent to the structural header must be filled with insulation. Figure 3-14 illustrates possible details for maximizing header insulation when intermediate or advanced framing is used.

Installing Through-the-Wall Air Intake Vents. Some ventilation options require these vents (see Chapter 7, Ventilation). When required, one must be placed in each bedroom and other habitable rooms of the house. Installation is easiest while the wall cavities are still open (see Figure 3-15).

Acceptable R-21 Walls

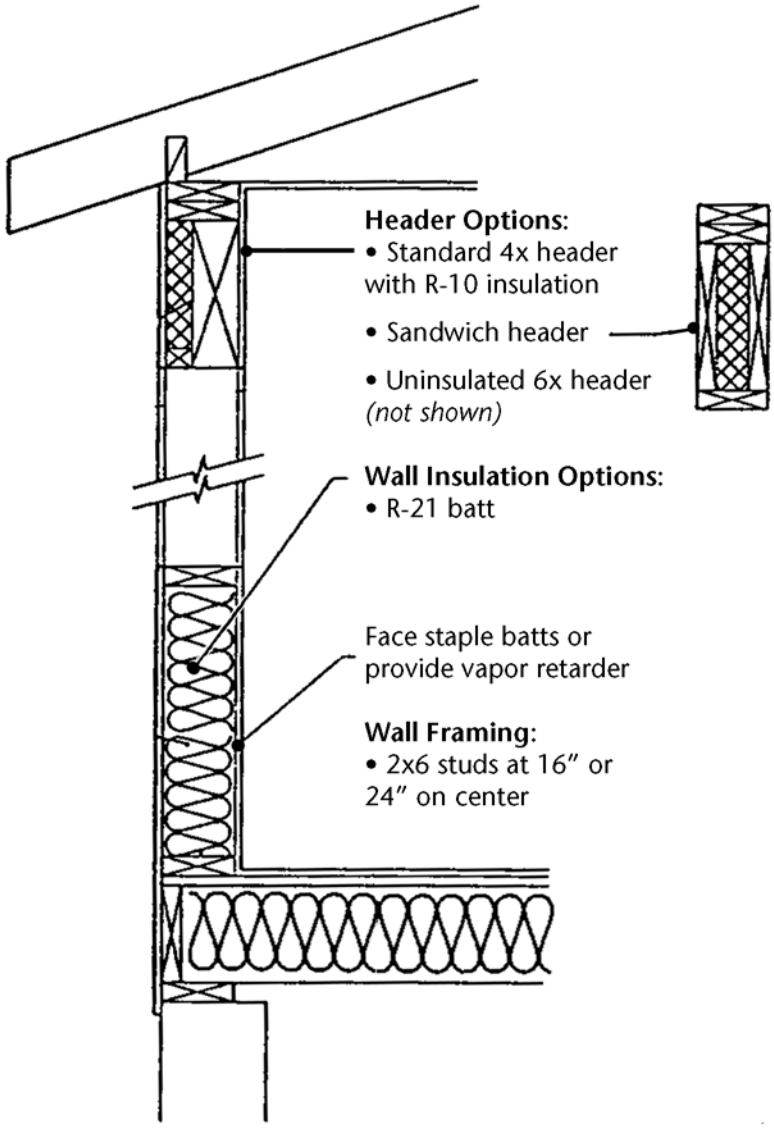

Figure 3-5

Acceptable Prescriptive Substitutes for R-21 Walls

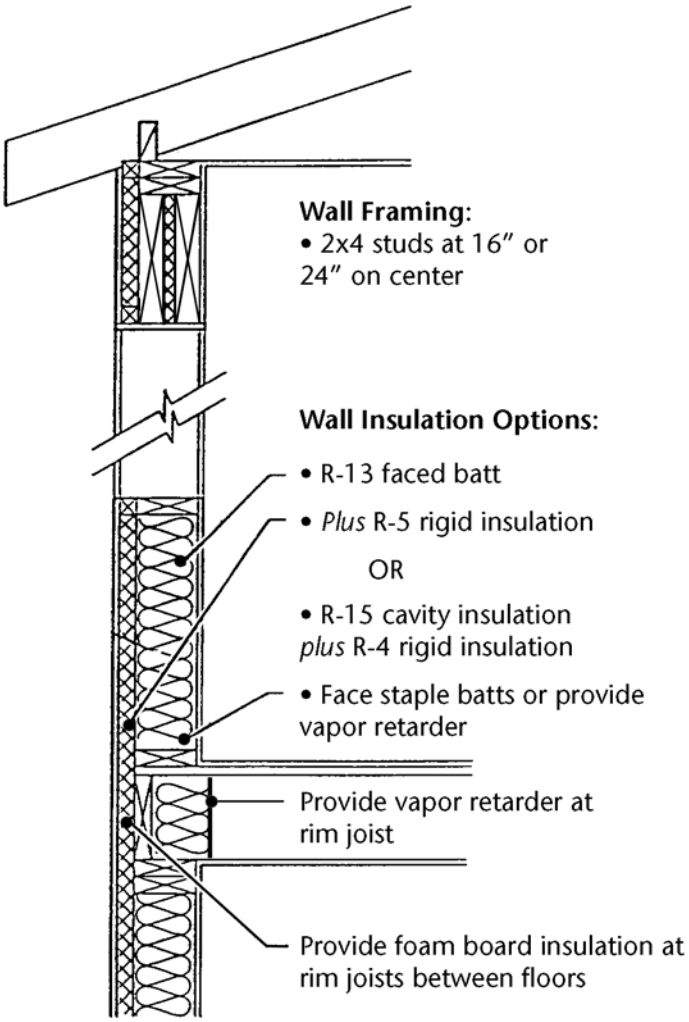

Figure 3-6

R-24 & Above Walls

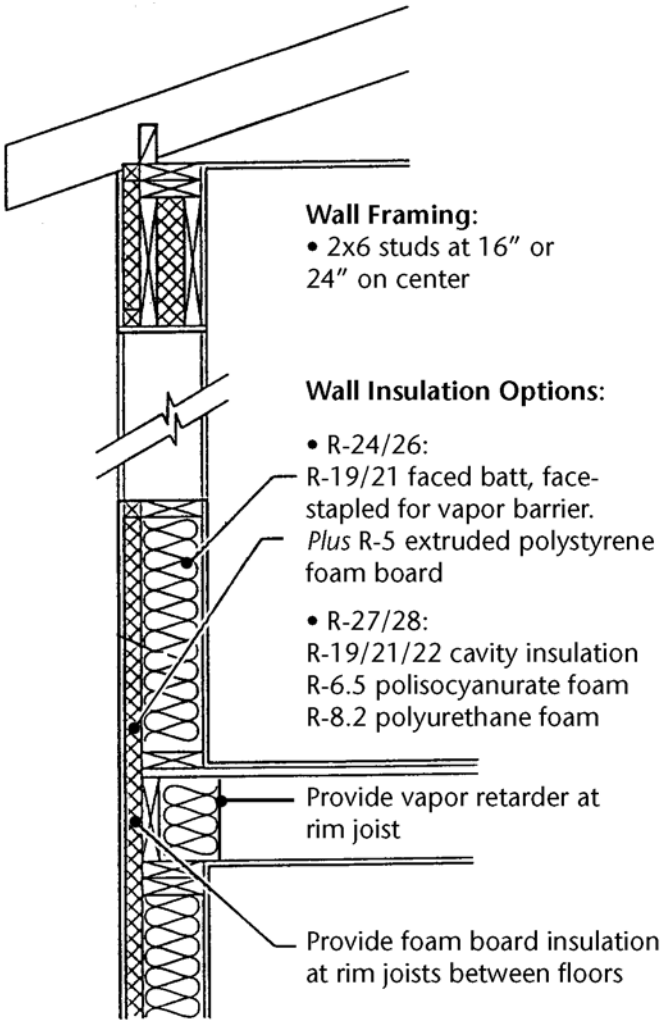

Figure 3-7

Double Wall

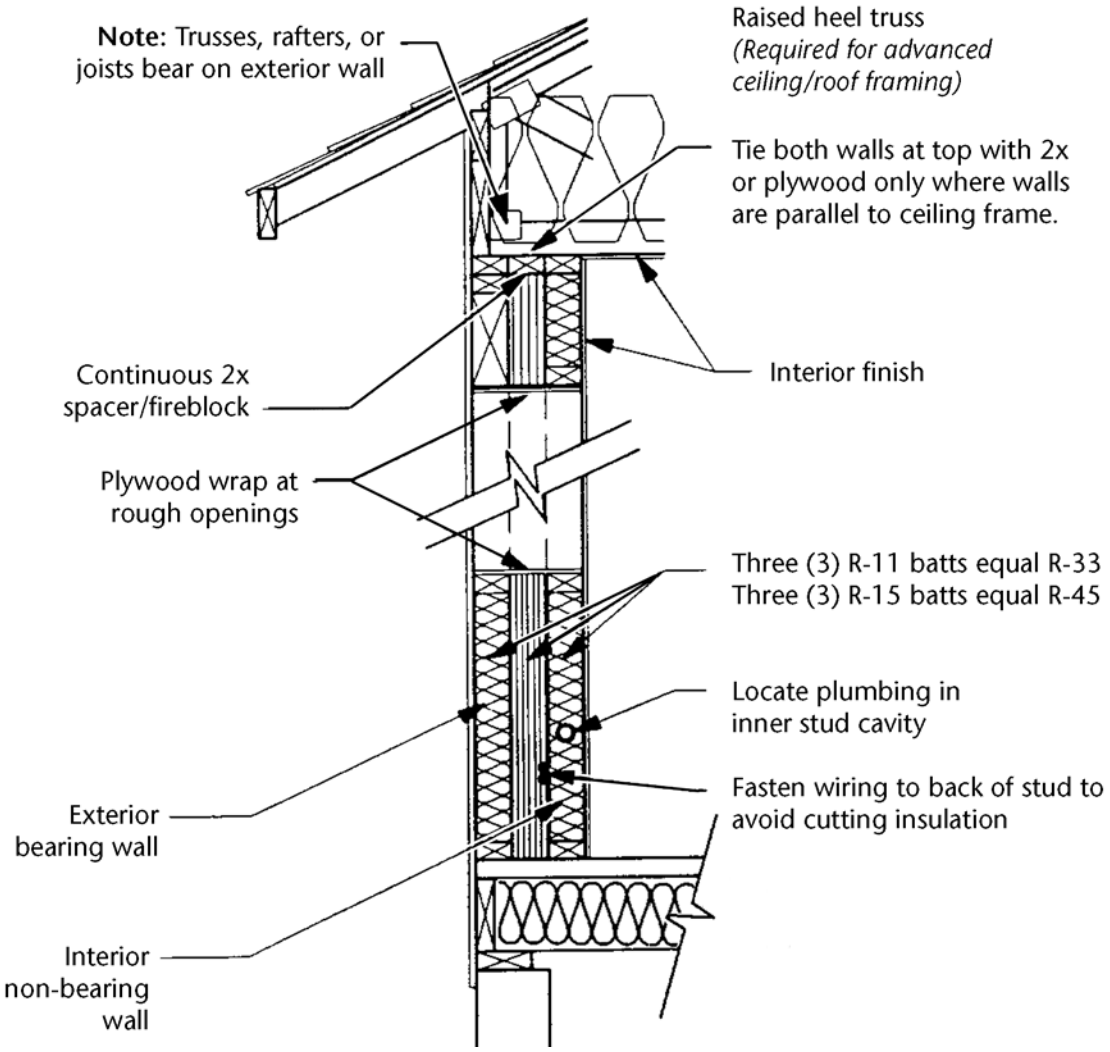

Figure 3-8

Above-Grade Wall: Interior Rigid Insulation

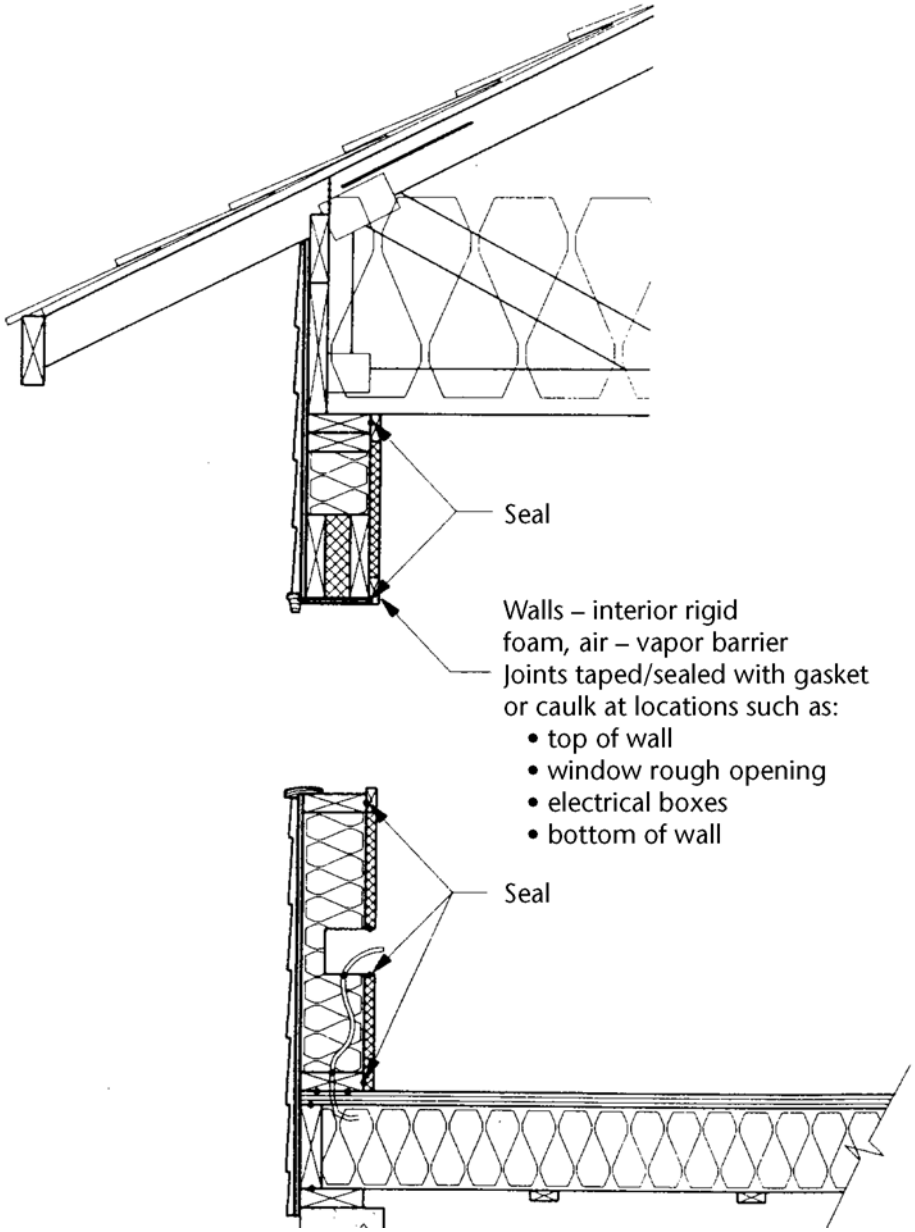

Figure 3-9

Interior Rigid Foam Framing Details

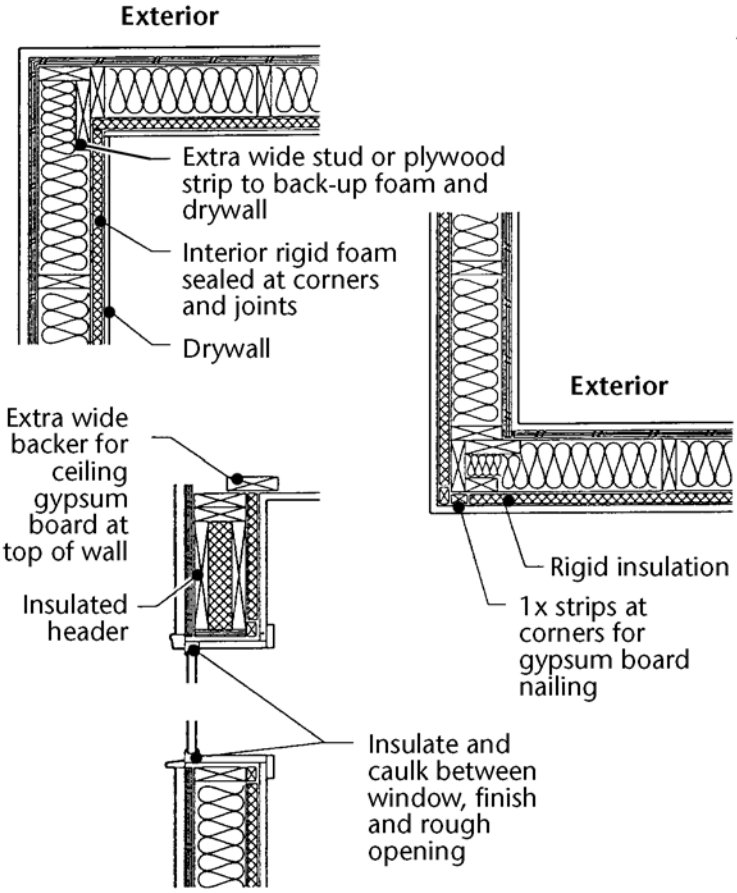

Figure 3-10

Corner Trim Detail for Exterior Rigid Insulation

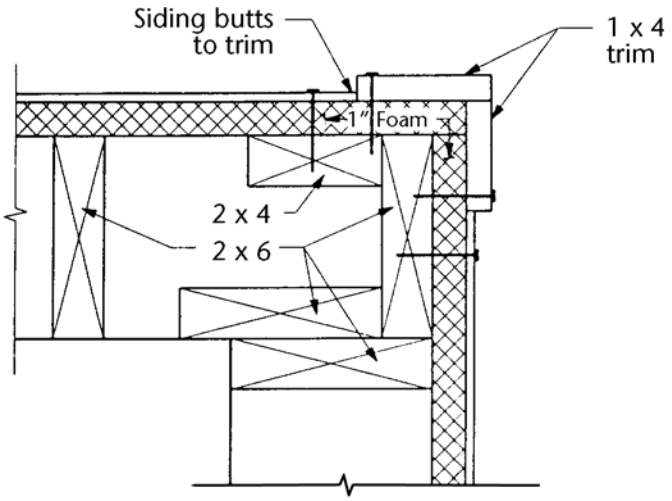

Figure 3-11a

Door Reinforcement for Exterior Rigid Insulation

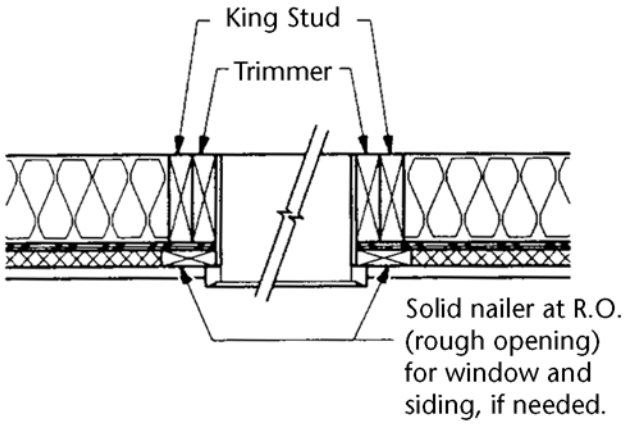

Figure 3-11b

Optional Details Allowing Easy Placement of Insulation - 1

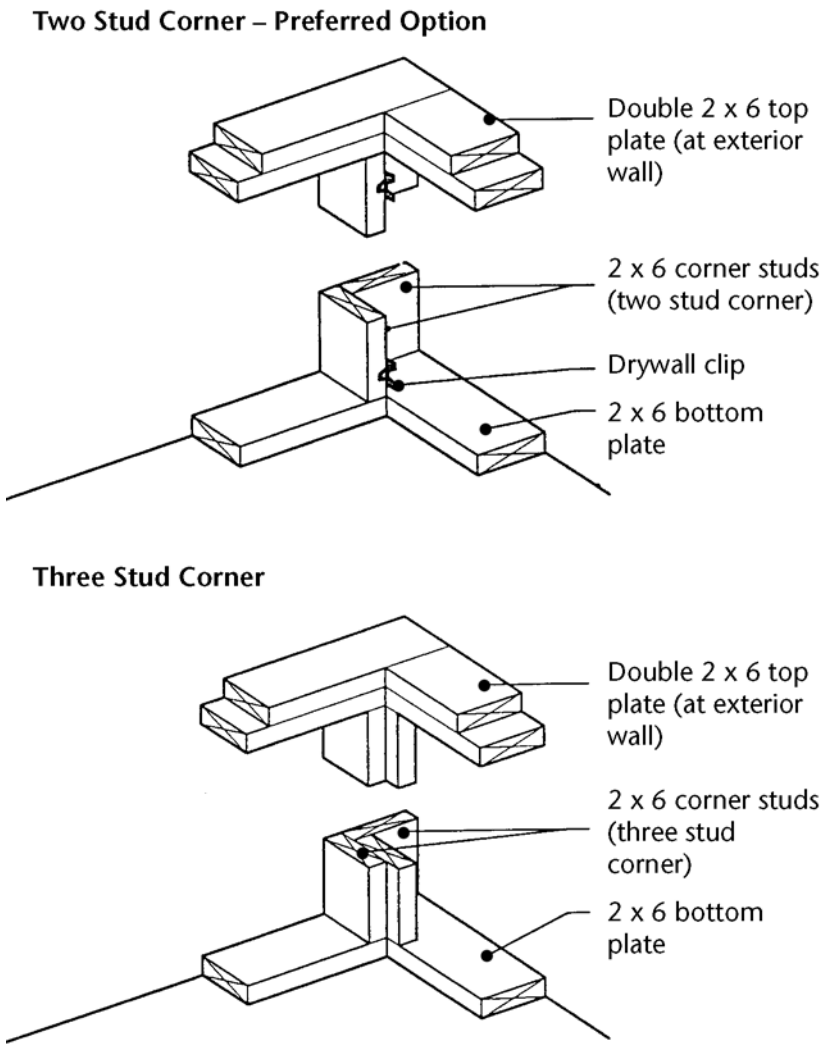

Figure 3-12

Optional Details Allowing Easy Placement of Insulation - 2

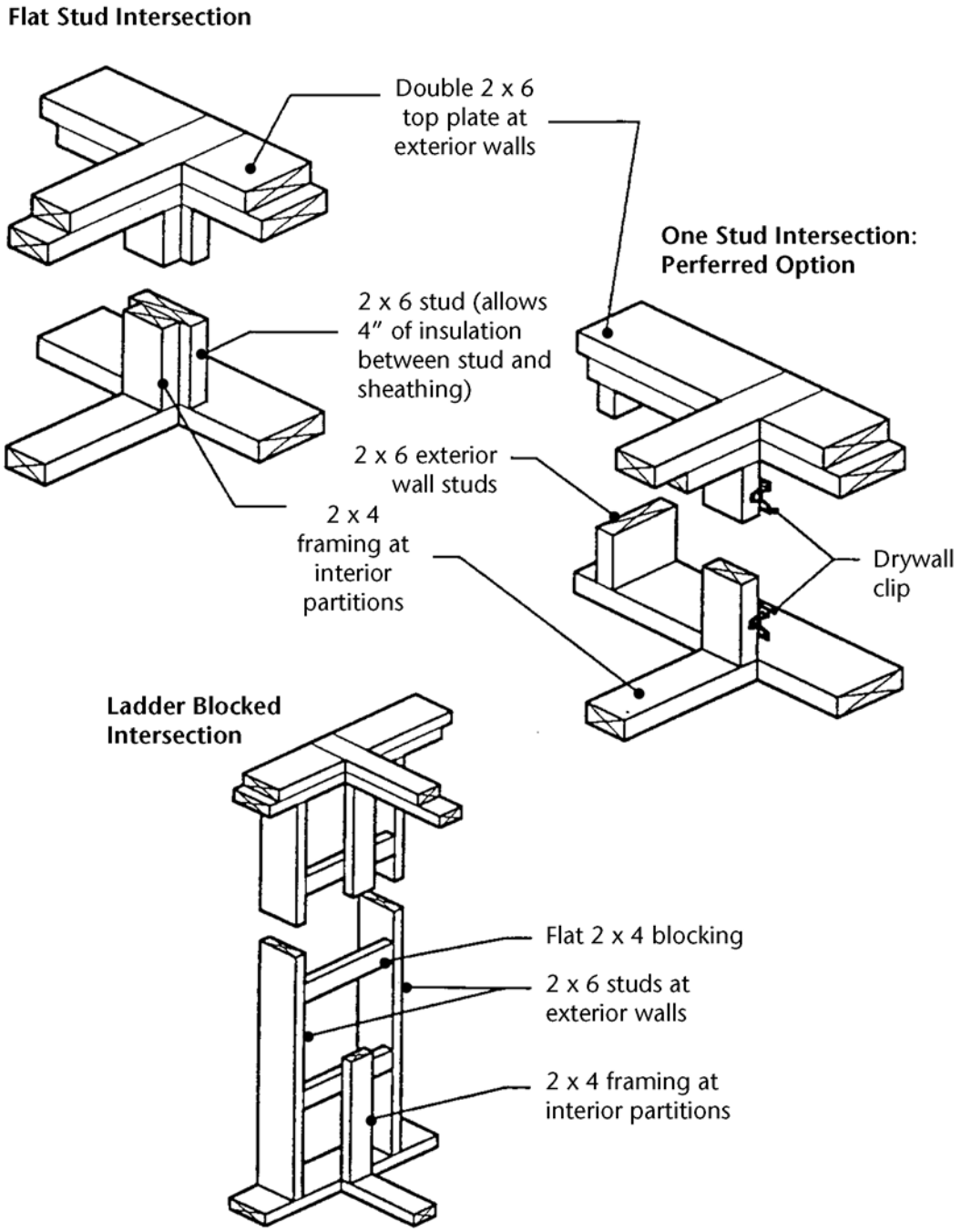

Figure 3-13

Header Details

(Required for Intermediate and Advanced Framing)

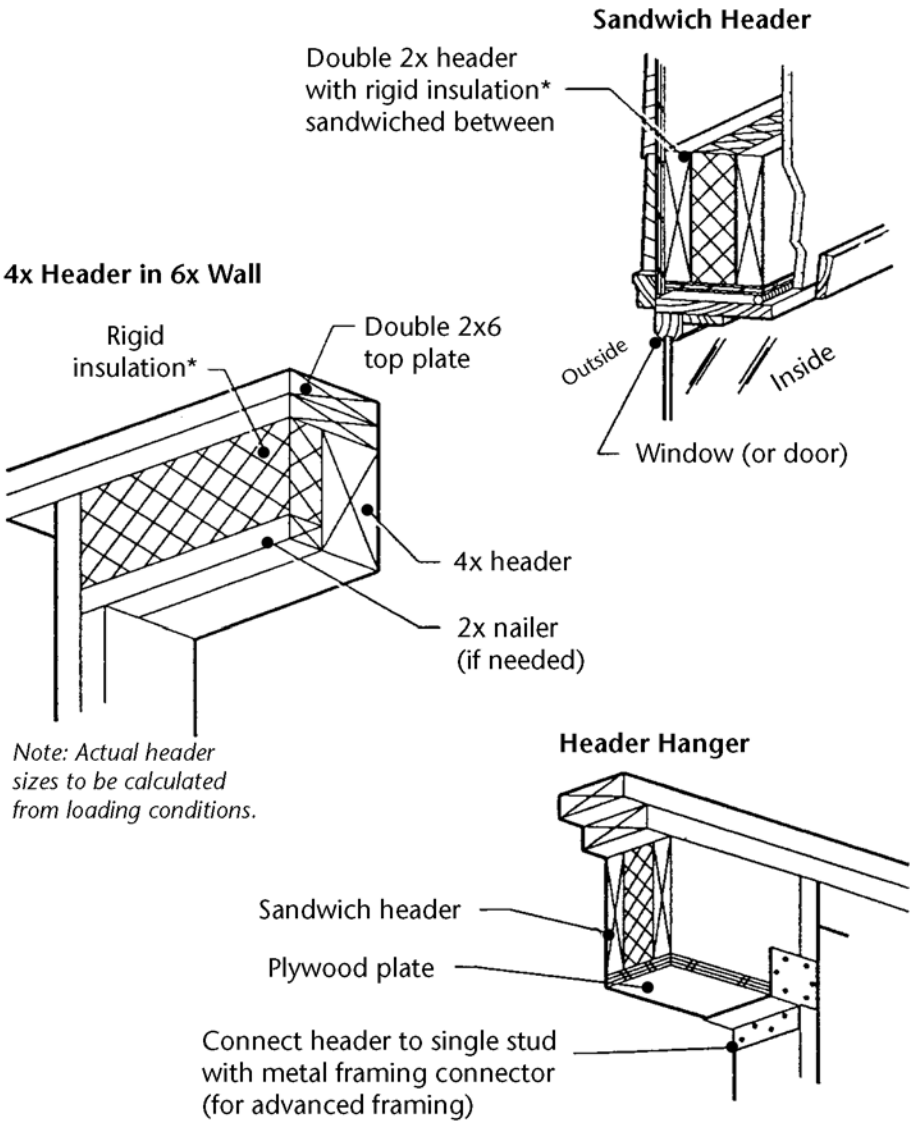

** Rigid insulated headers (R-10) required for intermediate and advanced framing.*

Figure 3-14

Air Intake Vent Installation Detail

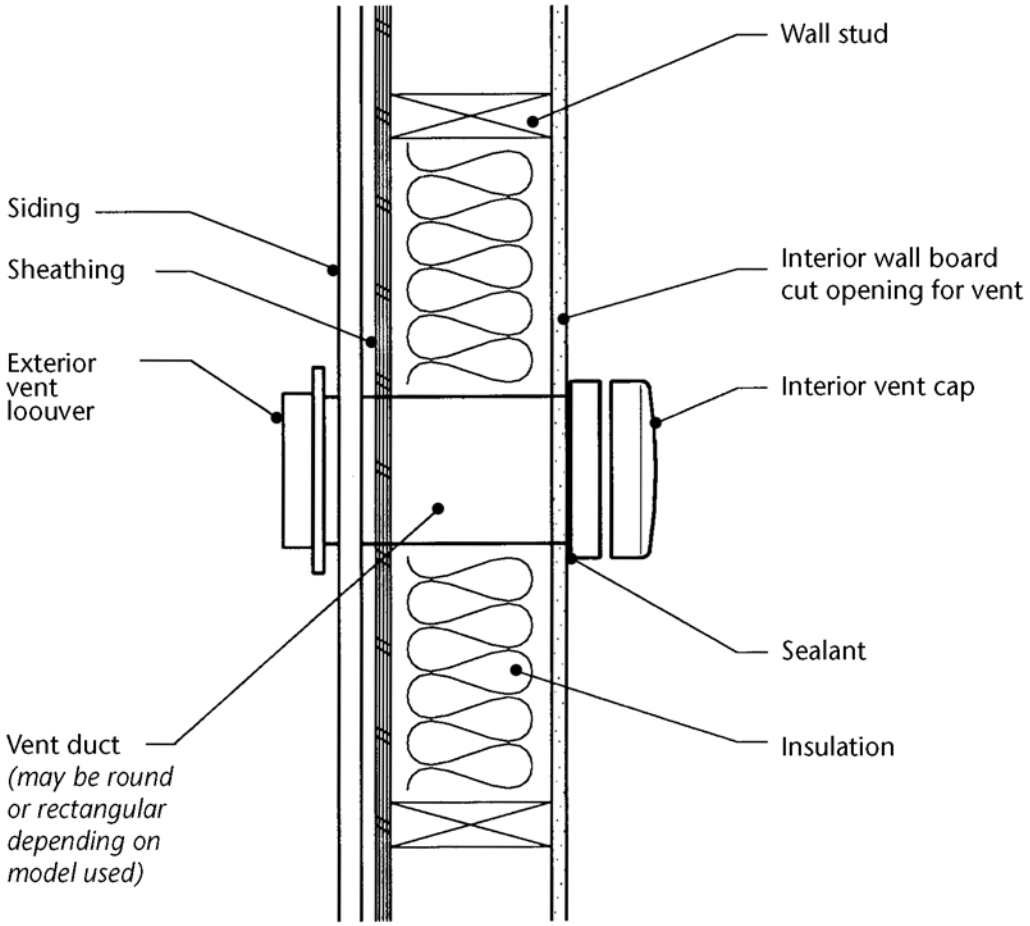

Figure 3-15

Energy-Efficient Ceiling/Roof Framing

Advanced Framing. An oversized or raised heel truss replaces the standard truss to avoid compressing insulation at the exterior wall (see Figure 3-16).

[502.1.4.3, 502.1.4.5] **Attic Venting.** Venting must meet IRC requirements. When venting is placed at the eaves, special consideration must be given to baffling the insulation in order to maintain a minimum 1 inch of free area for air movement from the vent into the attic (see Figure 4-4).

Vaulted Ceilings*. Following some prescriptive paths, single rafter vaults may only require R-30 insulation. Component performance compliance may allow less than R-30 if another component makes up the difference (see Chapter 1). Various options for framing vaulted ceilings to obtain high levels of insulation are available (see Figure 3-17).

[502.1.6.3] **Vault Cavity Ventilation.** Most ceilings with insulation beneath the structural sheathing, including vaults, must provide a minimum one-inch air space above the insulation (see Figure 3-18).

* A vaulted ceiling is defined as a ceiling where enclosed joist or rafter space is formed by ceilings applied directly to the underside of roof joists or rafters. A sloped ceiling of a scissor truss is not considered a vaulted ceiling.

Options to Maintain Full Heel Insulation
(Advanced Frame Ceiling)

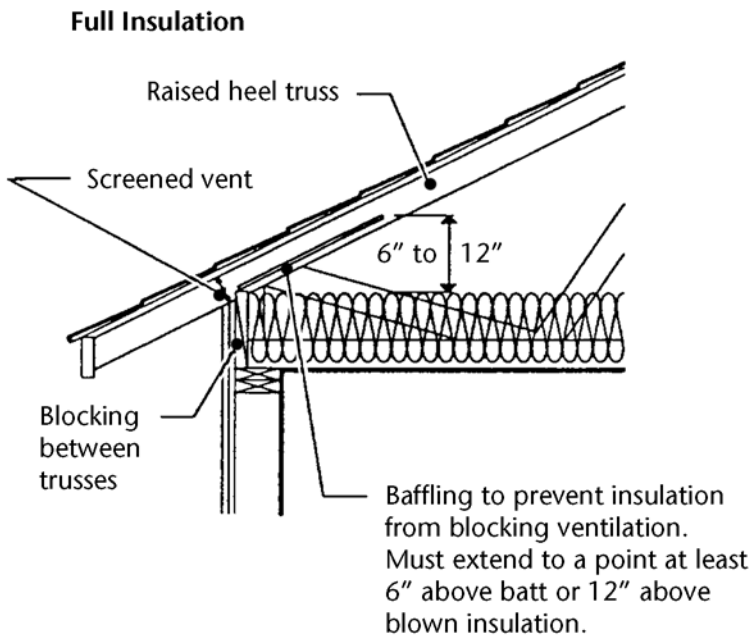

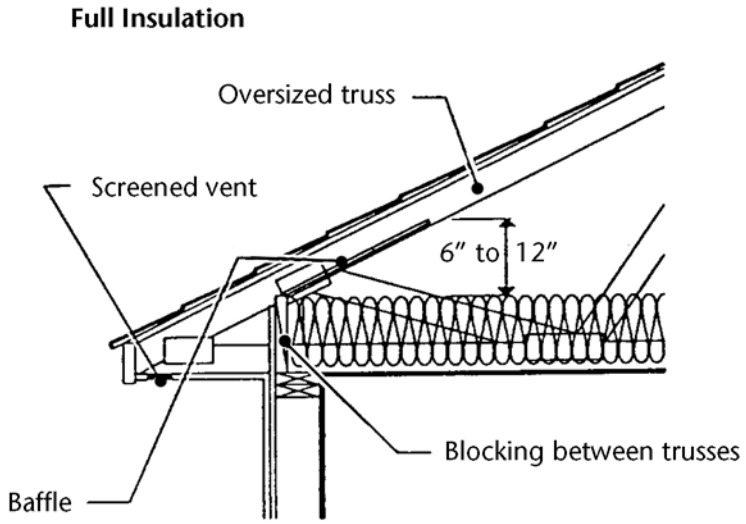

Figure 3-16

Vaulted Ceilings

Stick Frame (R-30/R-38)

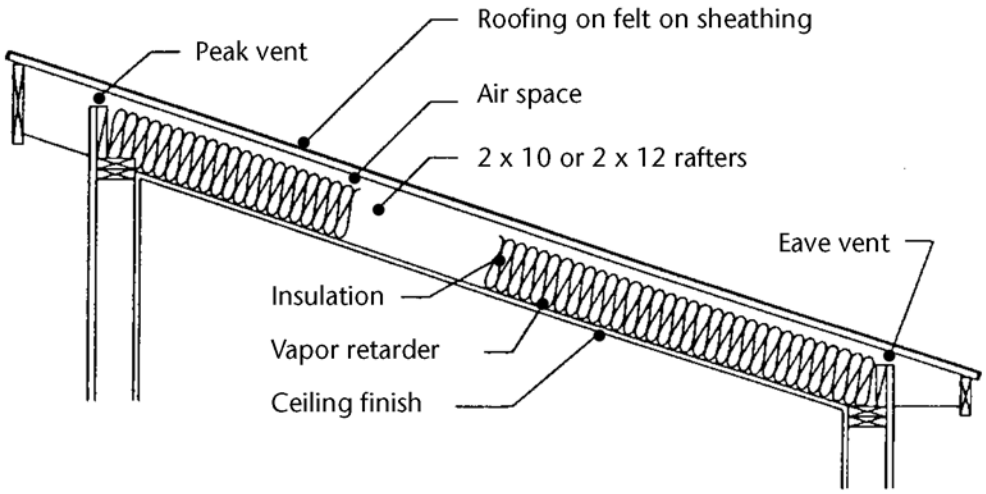

Flat Truss (R-38/R-60)

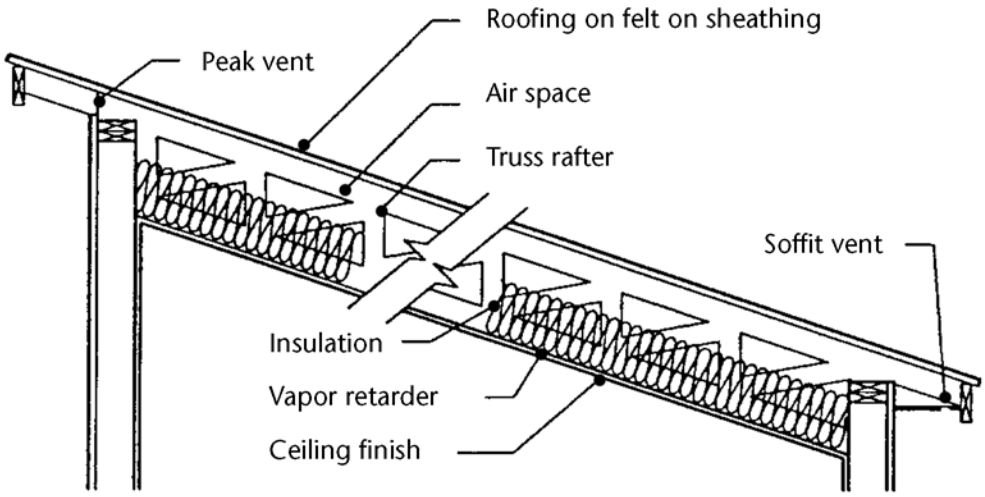

Figure 3-17

Venting Vaulted Ceilings

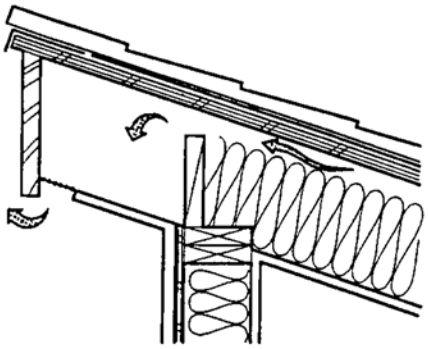

Shed Peak With Soffit

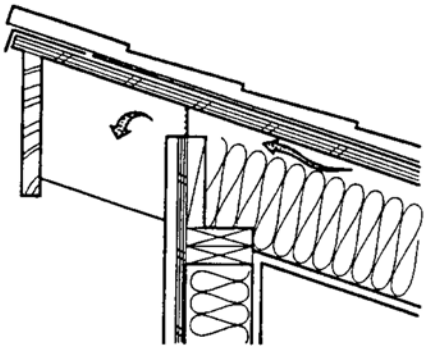

Shed Peak Without Soffit

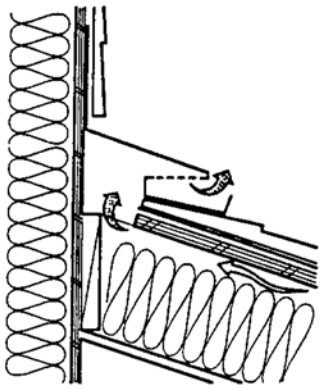

Shed Roof at Wall

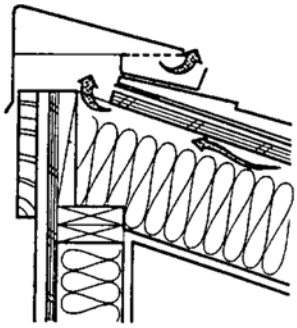

Shed Peak: No Overhang

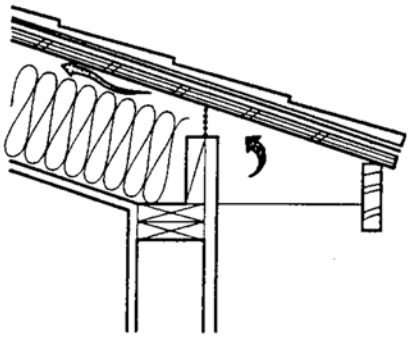

Eave Without Soffit

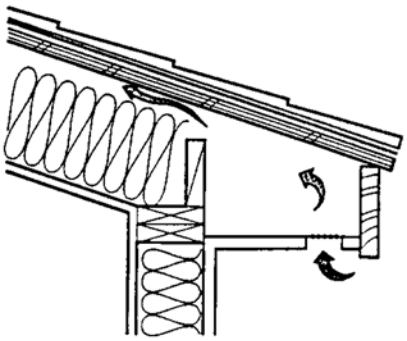

Eave With Soffit

Figure 3-18